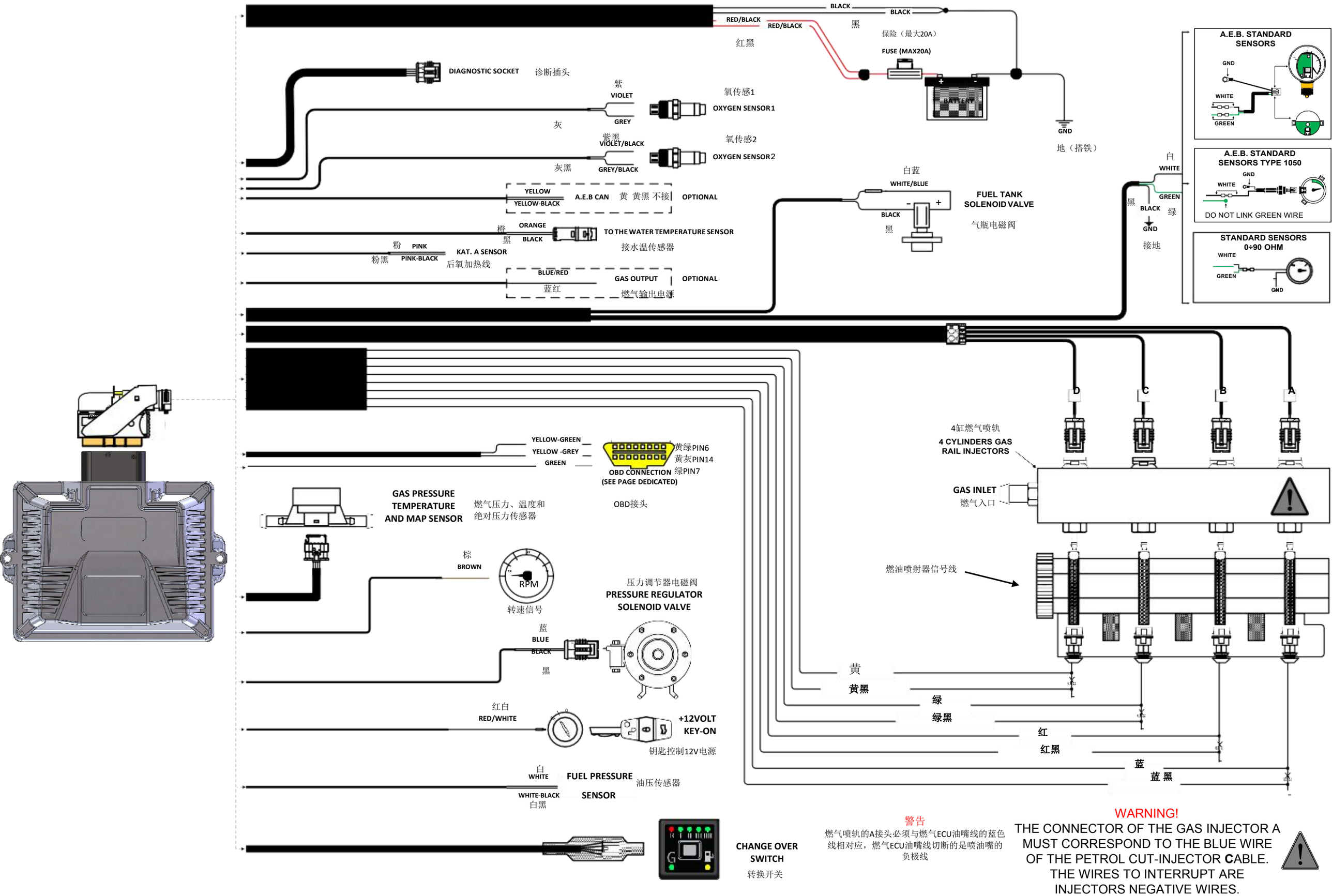

警告

燃气喷轨的A接头必须与燃气ECU油嘴线的蓝色线相对应，燃气ECU油嘴线切断的是喷油嘴的负极线

WARNING!

THE CONNECTOR OF THE GAS INJECTOR A MUST CORRESPOND TO THE BLUE WIRE OF THE PETROL CUT-INJECTOR **C**ABLE. THE WIRES TO INTERRUPT ARE INJECTORS NEGATIVE WIRES.